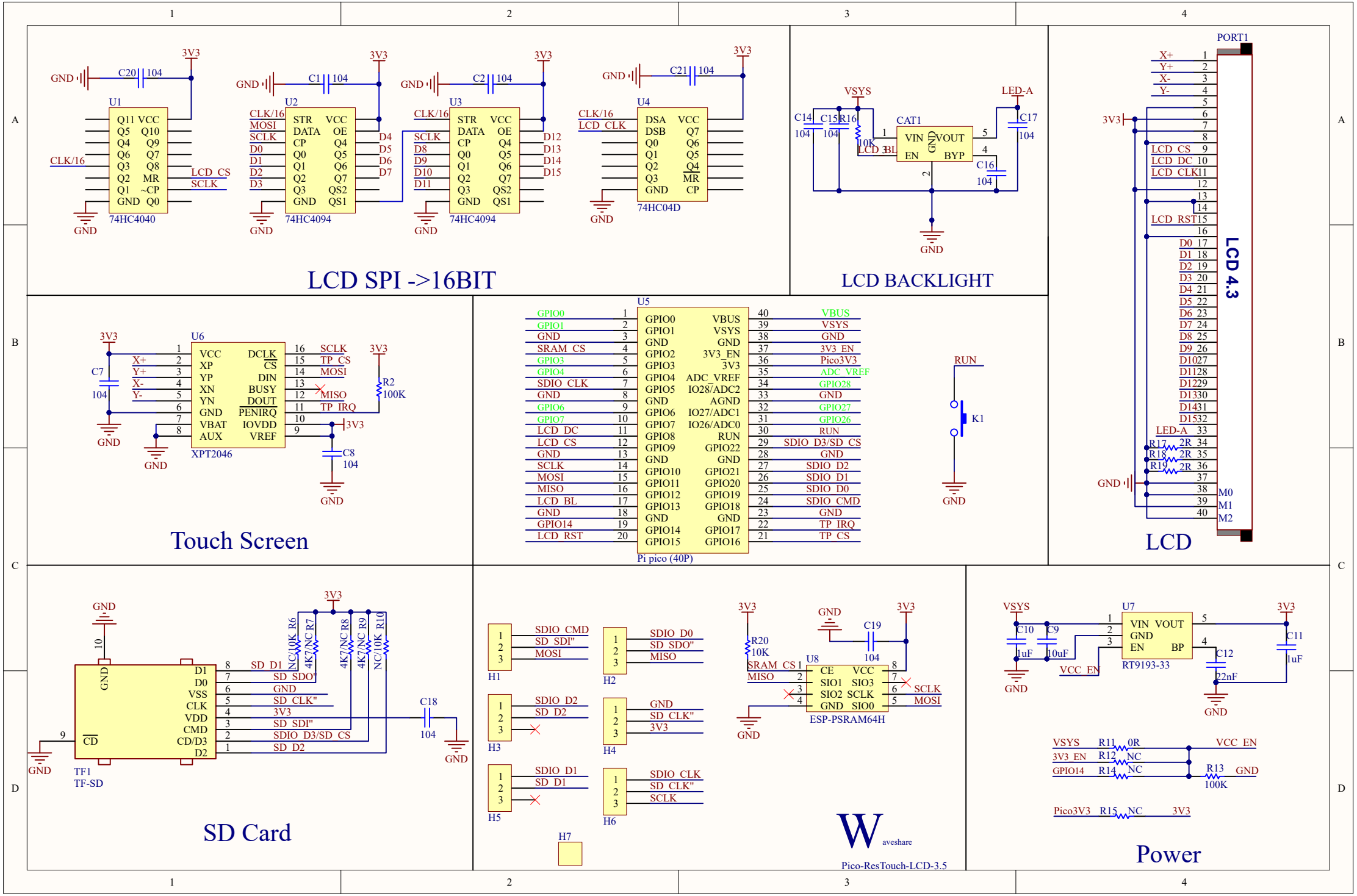
LCD SPI ->16BIT
U1
74HC4040
U2
74HC4094
U3
74HC4094
U4
74HC04D
LCD BACKLIGHT
CAT1
RT9193-33
LCD 4.3
PORT1
Touch Screen
U6
XPT2046
U5
Pi pico (40P)
K1
RUN
SD Card
TF1
TF-SD
U8
ESP-PSRAM64H
Pico-ResTouch-LCD-3.5
Power
U7
LCD
3V3
GND
VSYS
LED-A
VCC_EN

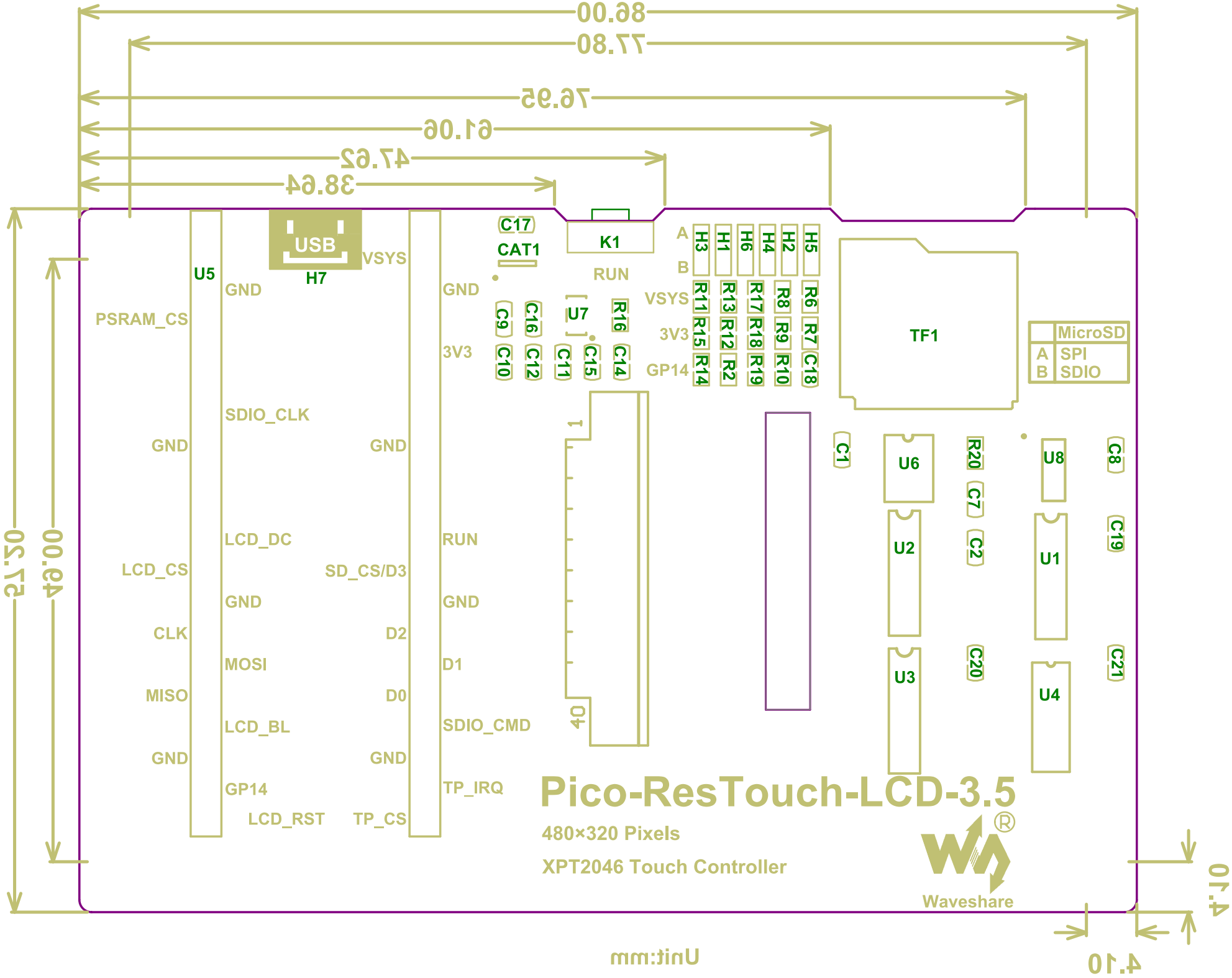
86.00
77.80
76.95
61.06
47.62
38.64
57.20
49.00
4.10
4.10
Unit:mm
USB
H7
VSYS
U5
GND
PSRAM_CS
SDIO_CLK
GND
LCD_DC
LCD_CS
GND
CLK
MOSI
MISO
LCD_BL
GND
GP14
LCD_RST
GND
3V3
GND
RUN
SD_CS/D3
GND
D2
D1
D0
SDIO_CMD
GND
TP_IRQ
TP_CS
C17
CAT1
K1
RUN
U7
C9
C10
C16
C12
C11
C15
R16
C14
A
B
VSYS
3V3
GP14
H3
H1
H6
H4
H2
H5
R11
R15
R14
R13
R12
R2
R17
R18
R19
R8
R9
R10
R6
R7
C18
TF1
MicroSD
A SPI
B SDIO
C1
U6
U2
U3
R20
C7
C2
C20
U8
U1
U4
C8
C19
C21
40
1
Pico-ResTouch-LCD-3.5
480×320 Pixels
XPT2046 Touch Controller
Waveshare